P.A. – S.p.A. – EQUIPAGGIAMENTI TECNICI DEL LAVAGGIO
VIA MILANO, 13 – CASELLA POSTALE 115 – 42048 RUBIERA (REGGIO EMILIA) – ITALY
Tel. +39 0522 623611 – Fax. +39 0522 629600 – R.E.A. RE 156319 – R.I. RE11535 – Mecc. RE 013446
C.F. e P. IVA 01035950359 – Cap. Soc. i.v. € 750.000,00 – Codice Identificativo C.E.E. IT 01035950359
ART. 2497 – BIS C.C. DIREZIONE E COORDINAMENTO BENETTI srl R.I. TRIB. DI RE 01480690351
Web: http://www.pa-etl.it – **E-mail:** info@pa-etl.it

VB 80/280 Zero – Flow sensitive unloader valve

Manuale tecnico: E 273

Pressure regulating valve unloader type with zero setting on delivery line: at gun closure the water flow is bypassed at low pressure maintaining also the delivery line in low pressure.

DN 15

- **60.2800.00** VB 80/280 Zero G 1/2" FF
  - Near total zero setting of the pressure in the delivery line at gun closure.
    Advantages:
    - Increased safety for the operator.
    - Delivery hose easy to control when gun is closed.
    - Less force needed to reopen the gun.
  - At gun reopening, work pressure is reached gradually.
    Advantages:
    - Operators work less heavy.
    - Easy starting if thermal engine is used.
  - Reduced pressure loss and hardly dependent on flow rate.
  - Great reliability.
  - Easy maintenance.

TECHNICAL SPECIFICATIONS

Construction material: brass body and internal parts in Sst.

PART NUMBER	MINIMUM FLOW		MAXIMUM FLOW		PERMISSIBLE PRESSURE		ADJUSTABLE MINIMUM PRESSURE		RATED TEMPERATURE (1)		WEIGHT		INLET OUTLET BYPASS
	l /min	USG	l / min	USG	bar	psi	bar	psi	°C	°F	g	lbs	
60.2800.00	20	*5.3*	80	*21*	280	*28*	55	*5.5*	60	*140*	1717	*3.7*	G 1/2" F

1) The valve has been designed for a continuous use at a water temperature of **60°C (140°F)**. It can work for short periods at a maximum temperature of **90°C (195°F)**.

DIMENSIONAL DRAWING

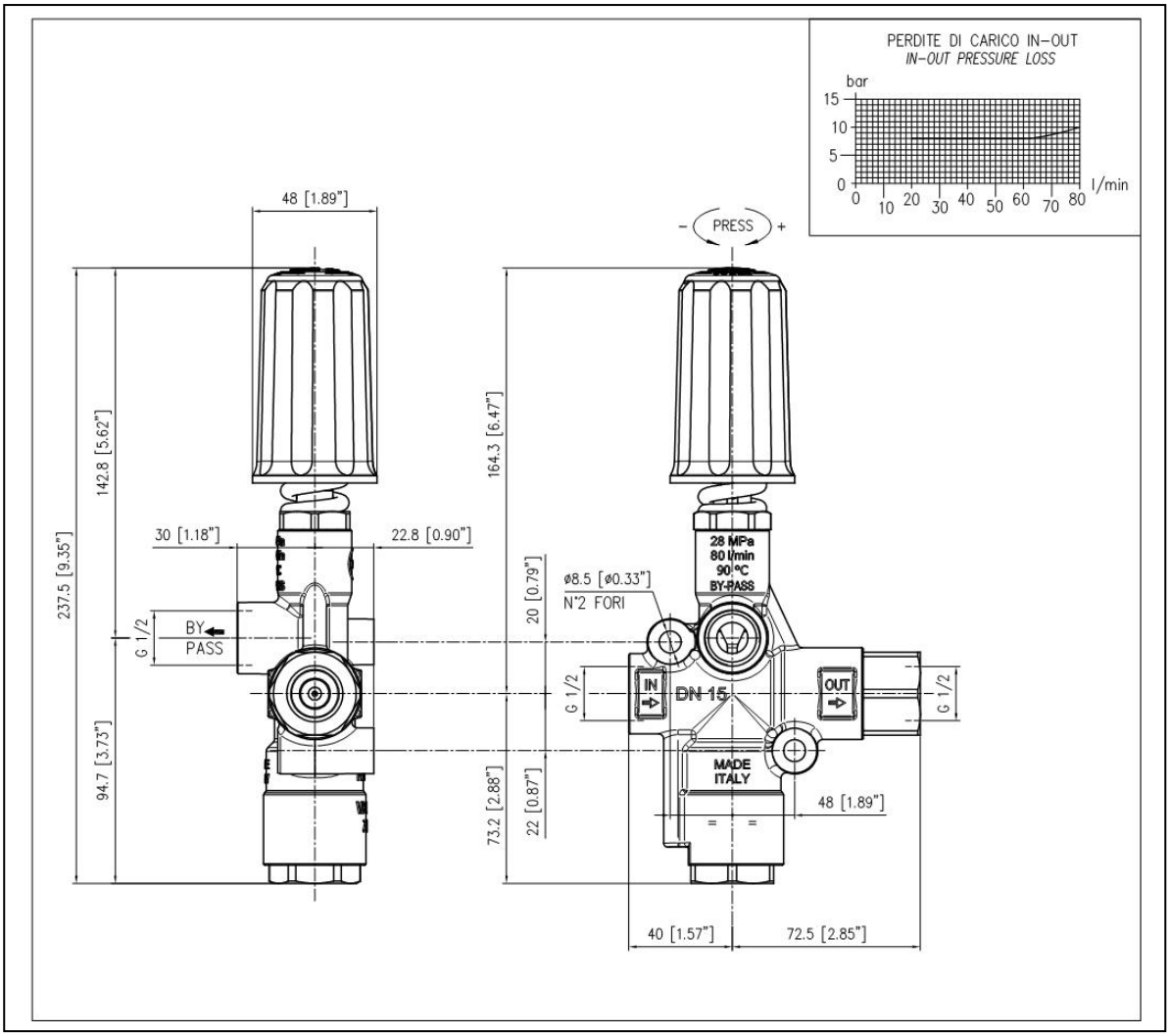

SELECTION

This product is intended to be incorporated on a finished machine. This product is to be utilized with clean fresh water, even slightly additivated with normal detergents. For use involving different or corrosive liquids, contact the PA Technical department. Appropriate filtration should be installed when using unpure liquids. Choose the valve in line with the working data of the machine where to be installed (permissible pressure, maximum flow and rated temperature of the system). In any case, the pressure of the machine must not exceed the **permissible pressure** imprimed on the valve.

Attention. The VB80/280 Zero valve is sensitive to water flow : at gun opening (water flow through the valve) the system goes into pressure, at gun closure (flow interruption) the system works at low pressure. For this reason the Pulsar zero valve cannot be installed on systems that fit always weeping antifreeze systems. Instead it can be installed on systems with antifreeze systems weeping at low pressure. In this case it is necessary to create in the bypass line a pressure higher than the pressure at which the antifreeze system becomes weeping.

OPERATIONS

The valve regulates the maximum pressure of the system by variating the flow discharged by the bypass. The adjustment is made by altering, by means of a piston, the position of a sphere which closes partially the bypass opening.

The valve is sensitive to water flow. With the gun open, the water flows through the valve which maintains the system in pressure. At gun closure, the interruption of the flow provokes the complete aperture of the bypass which allows to discharge the flow at low pressure. At gun closure, the special mechanism of zero setting patented by PA, which does not includes a check valve, keeps in connection the delivery line and the bypass line, in that way permitting to lower the pressure all around the system and not only in the source line of the valve.

INSTALLATION

This accessory, on a system that produces hot water, must be fitted upstream the heat generator. On a system that generates hot water, it is advisable to fit in accessories that limit the accidental increase of fluid temperature.

We highly advise not to install the valve on the pump head: secure the valve to the machine's frame by means of the fixing holes obtained on the body. In this way the valve is subject to less vibrations, reducing therefore the wearing of the internal parts.

Always install a safety valve.

We recommend the use of a nozzle with flow rate which allows a regular discharge from the valve bypass of at least 5% of the flow supplied by the pump, in order to achieve a constant pressure value and easy adjustment.

If the nozzle wears out, the pressure decreases. To reset pressure back at work level, it is necessary to replace the worn nozzle. When a new nozzle is fitted, re-setting of the system to its original working pressure is required.

DISCHARGE SYSTEM AND WATER ADDUCTION

The valve can be fitted on machines fed directly by the water system with bypass recycle to the pump or on machines fed by a tank where the bypass flow is also discharged.
In certain conditions, depending on installation and in particular:

- through feeding from tank,
- with long delivery lines or strong difference in level,
- with low flow and small flow factor nozzles,

it could occur that at gun opening, a delay in the reset of the working pressure is revealed or a pulsation of the valve. To avoid such inconveniences, it is necessary to guarantee always a pressure of at least 3-5 bar in the bypass line. This pressure can be obtained by throttling the bypass line in one of the following ways:

- fitting in the bypass channel a 3/8" hose instead of 1/2"
- fitting in the bypass channel a rigid tube of a sufficiently small diameter
- inserting in the bypass channel a connector with an adequate orifice diameter
- inserting in the bypass connection (Picture 1) a washer with an adequate orifice diameter (available on request; see chart)

Available washers on request			
Flow l/min (USGpm)	Ø orifice mm	Connector thread	code
20-30 (*5.3 – 8*)	4.5	Bsp	60.2624.31
30-50 (*8-13.2*)	5.5	Bsp	60.2625.31

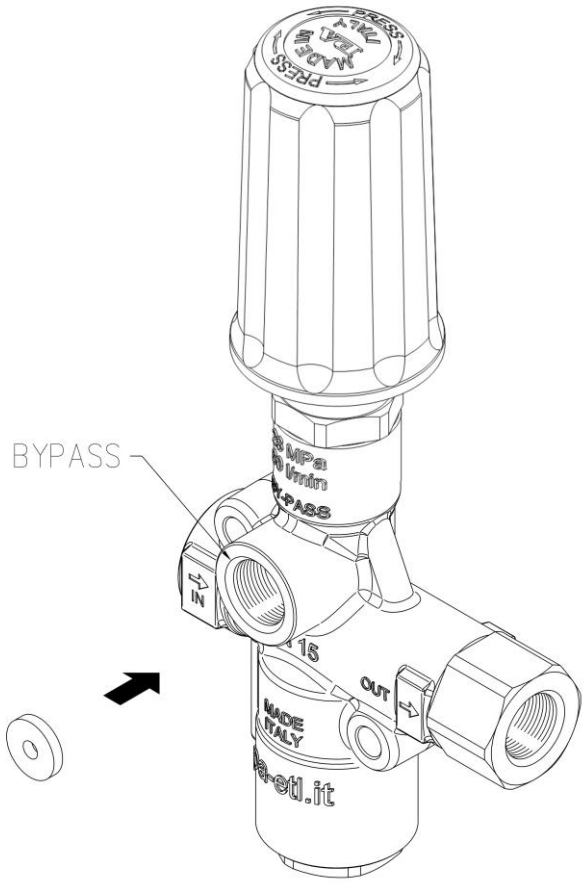

Picture 1

In the case of feeding from the tank where also the bypass flow is discharged, it would be advisable to fit in the feed line of the machine a low pressure pump that guarantees a feed pressure of the high pressure pump of 3-5 bar (See paragraph "EXAMPLES OF INSTALLATION" Picture 4).
It is advisable that the tank be provided with deflectors to reduce eventual turbolence and air bubbles, generated by the intake of the bypass flow, which could be harmful for the pump.
In the case of direct pump recycle of the bypass flow and if bypass conditions are foreseen frequently or for a long time, it is advisable to fit a thermal protector valve (VT3 or VT6) in order to avoid dangerous overheating of recycled water.

EXAMPLES OF INSTALLATION

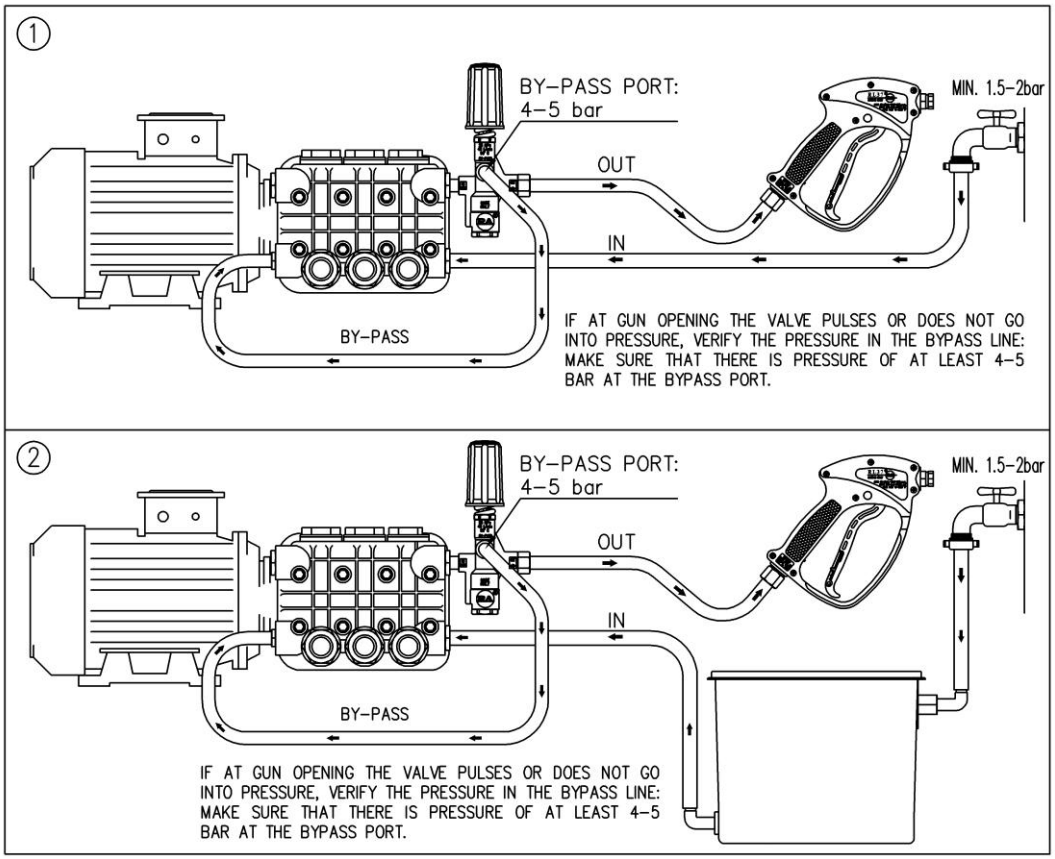

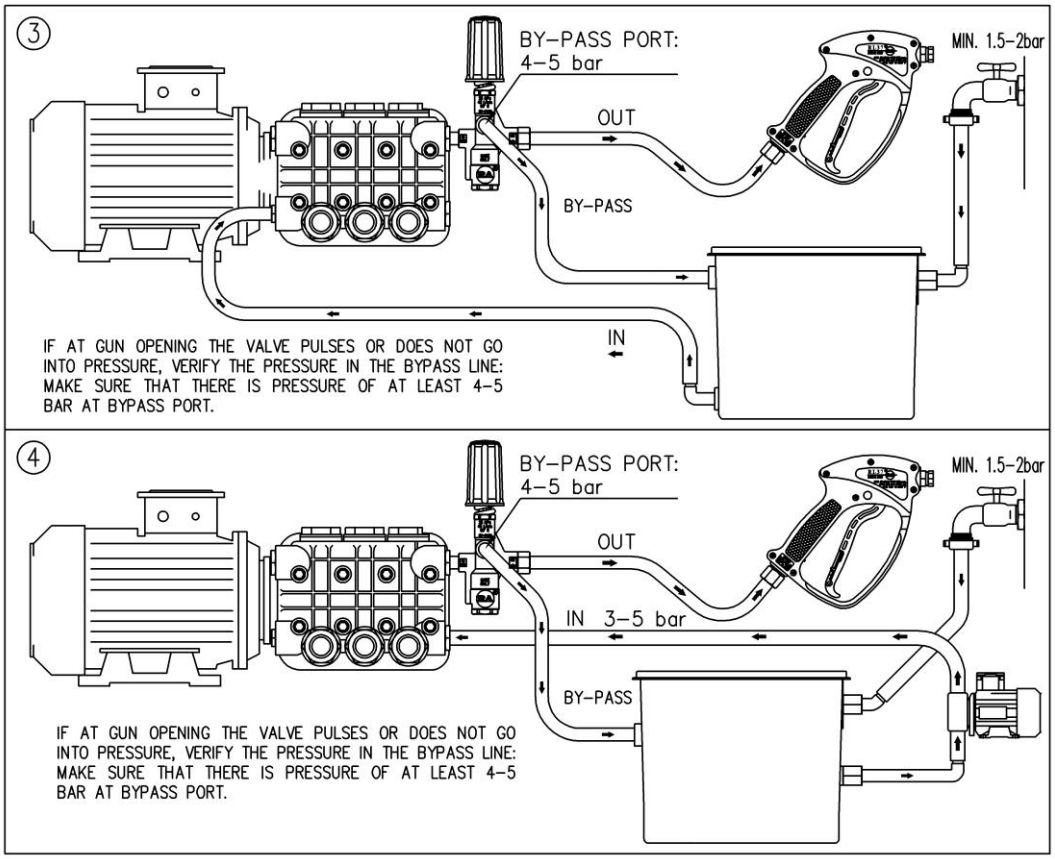

PRESSURE ADJUSTMENT/SETTING
The desired working pressure must be adjusted while the system is in operation and the gun is opened. Adjust the pressure by screwing or unscrewing the adjustment knob. The operation is easier if the correct nozzle has been chosen (see paragraph “installation”).
Pressure is increased by screwing the adjustment knob. In case pressure does not increase despite screwing of the knob, **do not force**, but check that the nozzle flow rate/pressure ratio is correct.

TROUBLE SHOOTING

PROBLEMS	PROBABLE CAUSE	REMEDY
At gun opening much time is required to reach working pressure	Delivery hose very long or big level difference between valve and gun Nozzle with very small flow factor (< 03) Pump feed from tank	Throttle bypass line
At gun opening the valve pulses	Delivery hose very long or big level difference between valve and gun Nozzle with very small flow factor (< 03) Pump feed from tank Flow rate of the pump pulsating	Throttle bypass line Check the pump or install a pulsation dampener
At gun closure the valve pulses (rearm)	Big leakage from the gun Leak from delivery line	Repair the gun to eliminate leakage Eliminate the leakage
At gun closure, the valve does not lower the pressure on the delivery line	Orifice of the shutter blocked (pos.29 on exploded view)	Clean and eliminate obstruction
Valve does not reach maximum pressure	Worn nozzle Seat damaged or worn Presence of matter between seat and shutter	Replace Replace Clean seat
Valve does not go into pressure	O-rings of Sst piston (pos. 4-1 e 11-12 of the exploded view) ruined	Replace

MAINTENANCE
STANDARD: every 400 working hours, check and lubricate the seals with water resistant grease.

SPECIAL: every 800 working hours, check the wear of the seals and internal parts and, if necessary, replace with original PA parts taking care, during installation, to lubricate with water resistant grease.

The maintenance must be carried out by specialized technicians.

The manufacturer is not to be considered responsible for damage as a result from incorrect fitting and maintenance.

REGULATIONS

For a correct utilization, follow the directions as described in this manual and re-print them on the Use and Maintenance Booklet of the machine.
If needed, ask for the original Conformity Declaration for the accessory chosen. The present manual is valid for all unloader valves named **VB 80/280 Zero**.

Technical data, descriptions and illustrations are indicative and liable for modification without notice.

Instruction manual, maintenance, installation, spare parts. For a correct utilization, follow the directions of this manual and **re-print them on the Use and Maintenance booklet of the machine.**	n. 12.9273.50

P.A. S.p.A.
Via Milano, 13
42048 Rubiera, Reggio Emilia - Italy
Tel +39.0522.623611
Fax +39.0522.629600
info@pa-etl.it

www.pa-etl.it

COMPANY WITH QUALITY MANAGEMENT
SYSTEM CERTIFIED BY DNV
=ISO 9001=